BC-3931

C-2601YRH, C-2602YRH, C-2603YRH, C-2604YRH,
C-2605YRH, C-2606YRH, CB-1031YRH, CB-2442YBH/L,
CB-2443YBH/L, CB-3931YBH/L

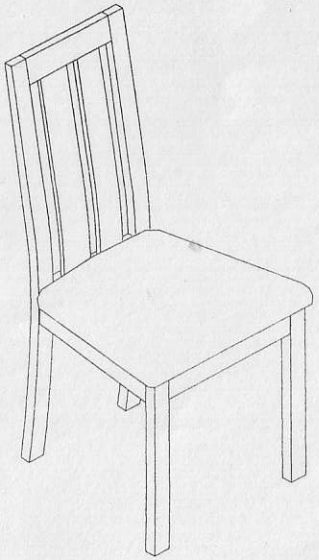

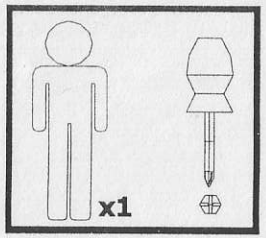

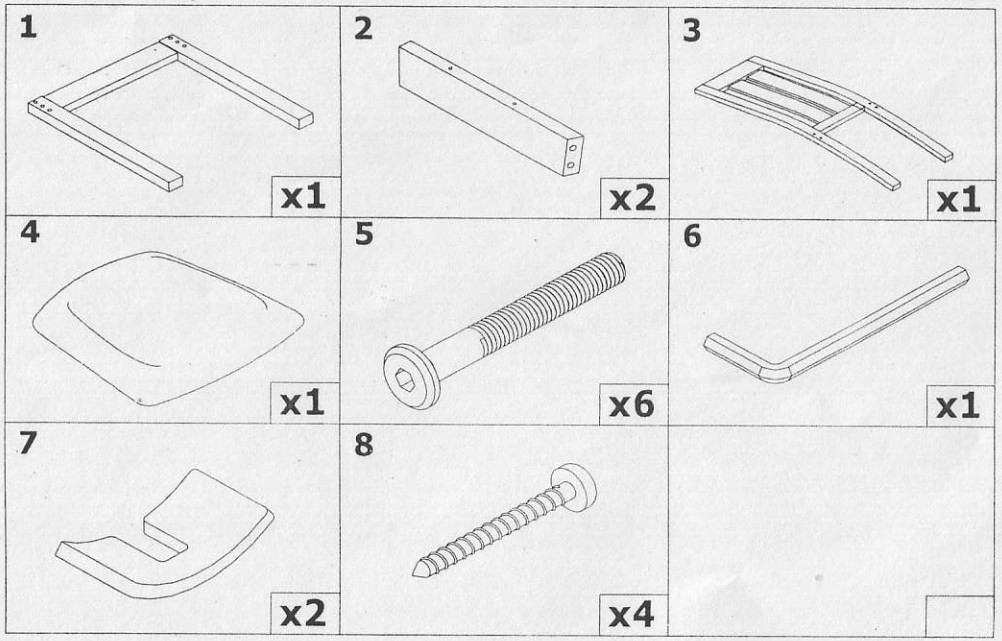

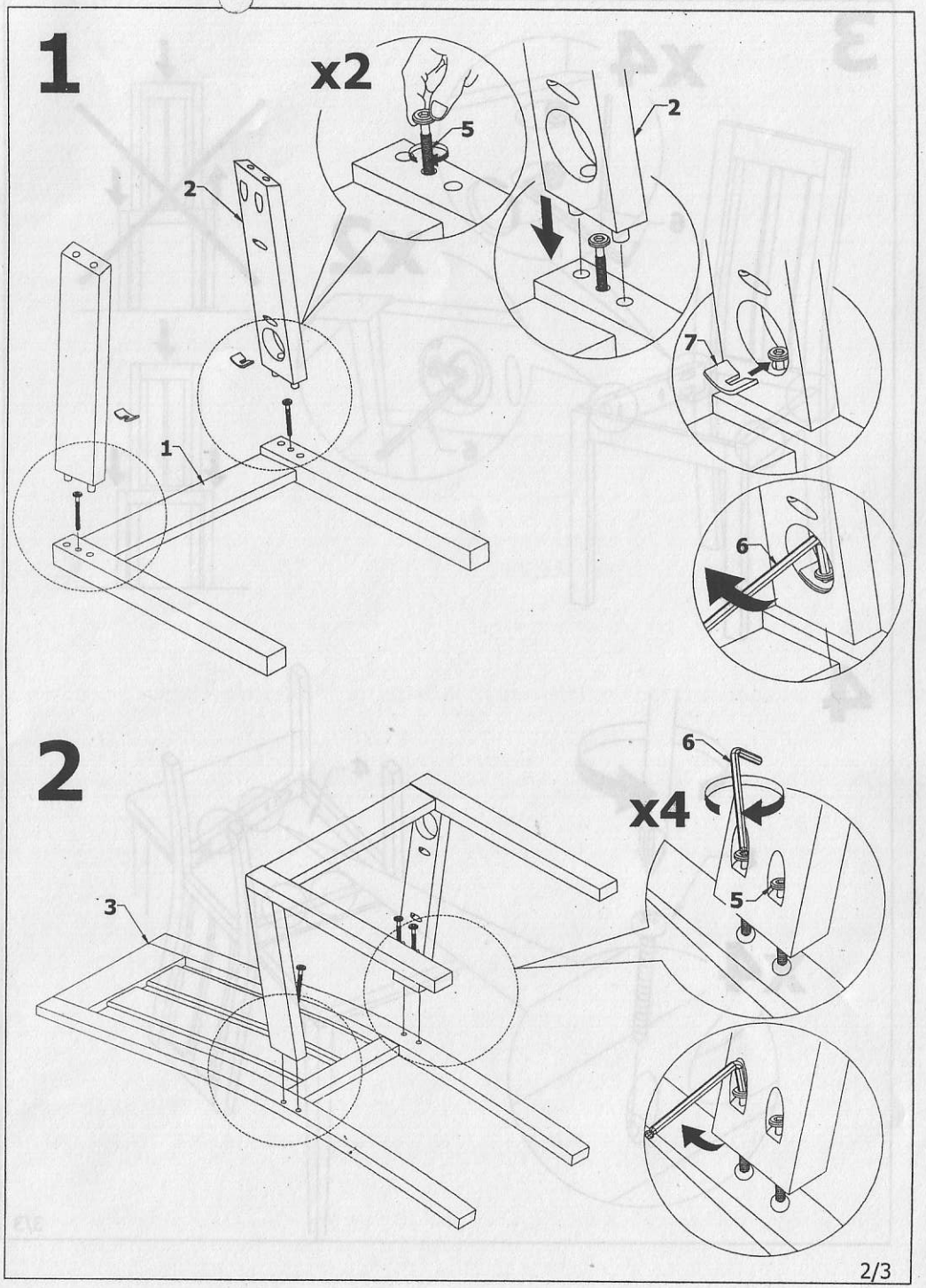

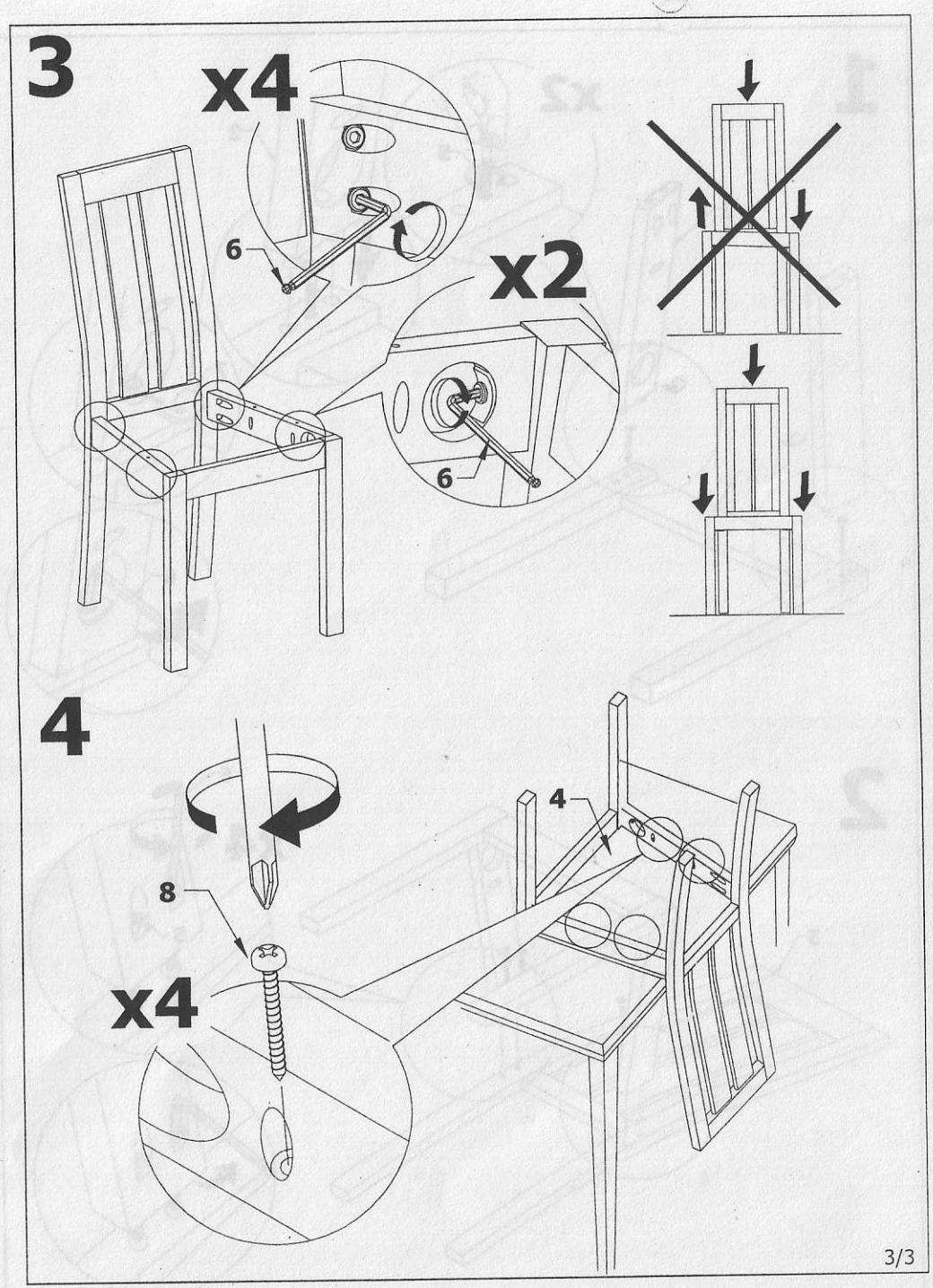
3
x4
6
x2
6
4
8
x4
4